P–CHANNEL
SILICON PLANAR
EPITAXIAL J FET
ANALOG SWITCHES

# IT100 IT101

## FEATURES

- Interfaces Directly with $T^2L$ Logic Elements so that No Extra Driver Stage is Required.
- $R_{DS(ON)} < 75\Omega$ for 5 V Logic Drive
- $I_{D(OFF)} < 100$ pA

## GENERAL DESCRIPTION

This P-channel JFET has been designed to directly interface with $T^2L$ logic, thus eliminating the need for costly drivers, in analog gate circuitry. Bipolar inputs of ±15 V can be switched. The FET is OFF for hi level inputs (+5 V or +15 V) and ON for low level inputs (< 0.5 V for IT100 < 1.5 V for IT101.

## ABSOLUTE MAXIMUM RATINGS

@25°C (unless otherwise noted)

Maximum Temperatures

| | |
|---|---|
| Storage Temperature (TO18) | −65°C to +200°C |
| Storage Temperature (TO92) | −55°C to +125°C |
| Operating Junction Temperature (TO18) | +200°C |
| Operating Junction Temperature (TO92) | +125°C |
| Lead Temperature (Soldering, 10 sec time limit) | +300°C |

Maximum Power Dissipation

| | |
|---|---|
| Device Dissipation @ Free Air Temperature | 300 mW |
| Linear Derating (TO18) | 1.7 mW/°C |
| (TO92) | 3.0 mW/°C |

Maximum Voltages & Current

| | | |
|---|---|---|
| $V_{GS}$ | Gate to Source Voltage | 35V |
| $V_{GD}$ | Gate to Drain Voltage | 35V |
| $I_G$ | Gate Current | 50 mA |

## ORDERING INFORMATION

| TO18 | TO92 | WAFER FORM | CHIP |
|---|---|---|---|
| IT100 | IT100-TO92 | IT100/W | IT100/D |
| IT101 | IT101-TO92 | IT101/W | IT101/D |

## PACKAGE DIMENSIONS

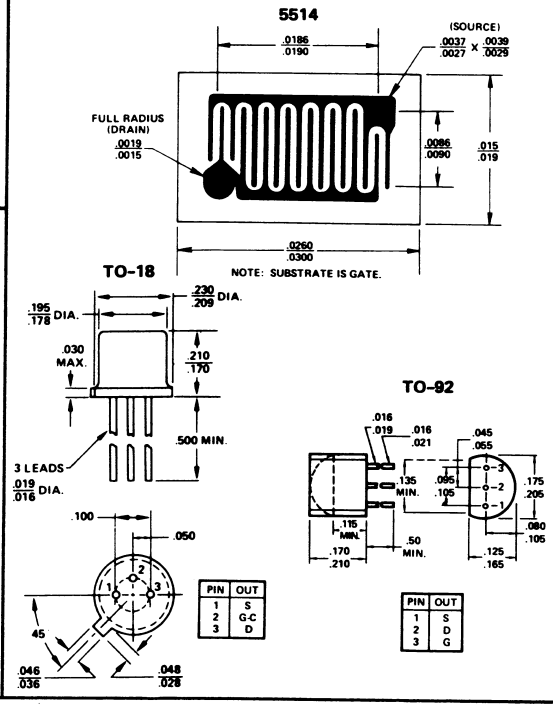


## ELECTRICAL CHARACTERISTICS @25°C (unless otherwise noted)

| | CHARACTERISTIC | IT100 MIN | IT100 MAX | IT101 MIN | IT101 MAX | UNIT | TEST CONDITIONS |
|---|---|---|---|---|---|---|---|
| $I_{DSS}$ | Max Drain Current | -10 | – | -20 | – | mA | $V_{GS} = 0, V_{DS} = -15$ V |
| $V_P$ | Pinch Off Voltage | 2 | 4.5 | 4 | 10 | V | $I_D = 1$ nA, $V_{DS} = -15$ V |
| $BV_{GSS}$ | Gate-Source Breakdown Voltage | 35 | | 35 | | V | $I_G = 1\ \mu A, V_{DS} = 0$ |
| $I_{GSS}$ | Gate Leakage Current | | 200 | | 200 | pA | $V_{GS} = 20$ V, $V_{DS} = 0$ |
| $g_{fs}$ | Transconductance | -8 | | -8 | | mmho | $V_{GS} = 0, V_{DS} = -15$ V |
| $g_{os}$ | Output Conductance | | -1 | | -1 | mmho | $V_{GS} = 0, V_{DS} = -15$ V |
| $I_{D(OFF)}$ | Drain (OFF) Leakage | | -100 | | -100 | pA | $V_{DS} = 10$ V, $V_{GS} = -15$ V |
| $R_{DS(ON)}$ | Drain-Source "ON" Resistance | | 75 | | 60 | Ω | $V_{GS} = 0, V_{DS} = -0.1$ V |
| $C_{iss}$ | Input Capacity | | 35 | | 35 | pF | $V_{DG} = -20$ V, $V_{GS} = 0$ |
| $C_{rss}$ | Reverse Transfer Capacity | | 12 | | 12 | pF | $V_{DG} = -10$ V, $I_S = 0$ |

## FEATURES

- High $h_{FE}$ at Low Current > 200 @ 10 μA
- Low Output Capacitance < 2.0 pf
- $I_{B1} - I_{B2}$ < 2.5 nA
- Tight $V_{BE}$ Tracking < 3.0 μV/°C

**DUAL MONOLITHIC MATCHED NPN SILICON PLANAR TRANSISTORS**

# IT120A IT120 IT121 IT122

## GENERAL DESCRIPTION

Matched pairs for differential amplifiers.

## ABSOLUTE MAXIMUM RATINGS (Note 1)

@ 25°C (unless otherwise noted)

Maximum Temperatures

| | |
|---|---|
| Storage Temperature | −65°C to +200°C |
| Operating Junction Temperature | +200°C |

Maximum Power Dissipation

| | TO-78 | | TO-71 | |
|---|---|---|---|---|
| | ONE SIDE | BOTH SIDES | ONE SIDE | BOTH SIDES |
| Total Dissipation at 25°C Case Temperature | 0.4 Watt | 0.75 Watt | 0.3 Watt | 0.5 Watt |
| Derating Factor | 2.3mW/°C | 4.3mW/°C | 1.7mW/°C | 4.3mW/°C |

Maximum Voltage & Current for Each Transistor

| | | |
|---|---|---|
| $V_{CBO}$ | Collector to Base Voltage | 45 V |
| $V_{CEO}$ | Collector to Emitter Voltage | 45 V |
| $V_{EBO}$ | Emitter to Base Voltage | 7.0 V |
| $V_{CCO}$ | Collector to Collector Voltage | 60 V |
| $I_C$ | Collector Current | 50mA |

## ORDERING INFORMATION

| TO78 | TO71 | WAFER | CHIP |
|---|---|---|---|
| IT120A | IT120A-TO71 | IT120A/W | IT120A/D |
| IT120 | IT120-TO71 | IT120/W | IT120/D |
| IT121 | IT121-TO71 | IT121/W | IT121/D |
| IT122 | IT122-TO71 | IT122/W | IT122/D |

## PACKAGE DIMENSIONS

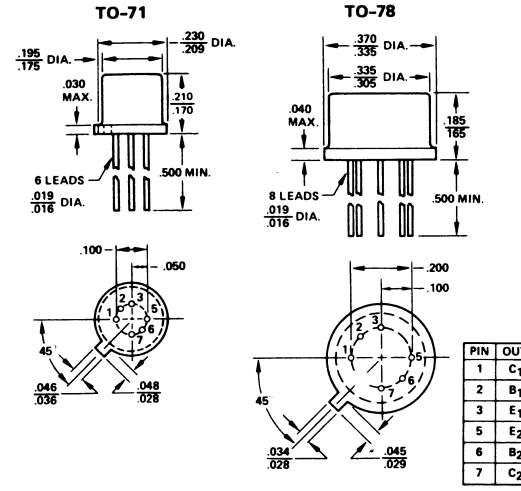


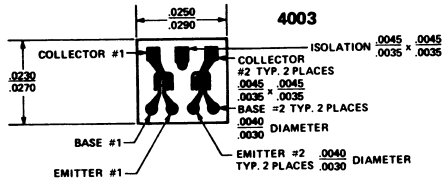


## ELECTRICAL CHARACTERISTICS (25°C unless otherwise noted)

| | PARAMETER | IT120A MIN | IT120A MAX | IT120 MIN | IT120 MAX | IT121 MIN | IT121 MAX | IT122 MIN | IT122 MAX | UNIT | TEST CONDITIONS |
|---|---|---|---|---|---|---|---|---|---|---|---|
| $h_{FE}$ | DC Current Gain | 200 | | 200 | | 80 | | 80 | | | $I_C$ = 10 μA, $V_{CE}$ = 5.0 V |
| $h_{FE}$ | DC Current Gain | 225 | | 225 | | 100 | | 100 | | | $I_C$ = 1.0 mA, $V_{CE}$ = 5.0 V |
| $h_{FE}$(−55°C) | DC Current Gain | 75 | | 75 | | 30 | | 30 | | | $I_C$ = 10 μA, $V_{CE}$ = 5.0 V |
| $V_{BE}$(ON) | Emitter-Base On Voltage | | 0.7 | | 0.7 | | 0.7 | | 0.7 | V | $I_C$ = 10 μA, $V_{CE}$ = 5.0 V |
| $V_{CE}$(SAT) | Collector Saturation Voltage | | 0.5 | | 0.5 | | 0.5 | | 0.5 | V | $I_C$ = 0.5 mA, $I_B$ = 0.05 mA |
| $I_{CBO}$ | Collector Cutoff Current | | 1.0 | | 1.0 | | 1.0 | | 1.0 | nA | $I_E$ = 0, $V_{CB}$ = 45 V |
| $I_{CBO}$(+150°C) | Collector Cutoff Current | | 10 | | 10 | | 10 | | 10 | μA | $I_E$ = 0, $V_{CB}$ = 45 V |
| $I_{EBO}$ | Emitter Cutoff Current | | 1.0 | | 1.0 | | 1.0 | | 1.0 | nA | $I_C$ = 0, $V_{EB}$ = 5.0 V |
| $C_{OB}$ | Output Capacitance | | 2.0 | | 2.0 | | 2.0 | | 2.0 | pF | $I_E$ = 0, $V_{CB}$ = 5.0 V |
| $C_{TE}$ | Emitter Transition Capacitance | | 2.5 | | 2.5 | | 2.5 | | 2.5 | pF | $I_C$ = 0, $V_{EB}$ = 0.5 V |
| $C_{C_1 \cdot C_2}$ | Collector to Collector Capacitance | | 4.0 | | 4.0 | | 4.0 | | 4.0 | pF | $V_{CC}$ = 0 |
| $I_{C_1 \cdot C_2}$ | Collector to Collector Leakage Current | | 10 | | 10 | | 10 | | 10 | nA | $V_{CC}$ = ±60 V |
| $V_{CEO}$(SUST) | Collector to Emitter Sustaining Voltage | 45 | | 45 | | 45 | | 45 | | V | $I_C$ = 1.0 mA, $I_B$ = 0 |
| $f_T$ | Current Gain<br>Bandwidth Product | 10<br>220 | | 10<br>220 | | 7<br>180 | | 7<br>180 | | MHz<br>MHz | $I_C$ = 10 μA, $V_{CE}$ = 5 V<br>$I_C$ = 1 mA, $V_{CE}$ = 5 V |
| $\lvert V_{BE_1}-V_{BE_2}\rvert$ | Base Emitter Voltage Differential | | 1 | | 2 | | 3 | | 5 | mV | $I_C$ = 10 μA, $V_{CE}$ = 5.0 V |
| $\lvert I_{B_1}-I_{B_2}\rvert$ | Base Current Differential | | 2.5 | | 5 | | 25 | | 25 | nA | $I_C$ = 10 μA, $V_{CE}$ = 5.0 V |
| $\lvert\Delta(V_{BE_1}-V_{BE_2})\rvert$ | Base-Emitter Voltage Differential Change with Temperature | | 3 | | 5 | | 10 | | 20 | μV/°C | $T_A$ = −55°C to +125°C<br>$I_C$ = 10 μA, $V_{CE}$ = 5.0 V |

NOTES:
(1) These ratings are limiting values above which the serviceability of any semiconductor device may be impaired.
(2) The lowest of two $h_{FE}$ readings is taken as $h_{FE_1}$ for purposes of this ratio.

# IT124
# SUPER-BETA DUAL MONOLITHIC NPN SILICON PLANAR TRANSISTORS

## FEATURES

- Very High Gain – $h_{FE} \geqslant 1500$ @ 1 and 10μA
- Low Output Capacitance – $C_{obo} \leqslant 0.8$ pF
- Tight $V_{BE}$ Matching – $|V_{BE_1} - V_{BE_2}|$ – 2 mV TYP.
- High $f_T$ – 100 MHz

## PACKAGE DIMENSIONS

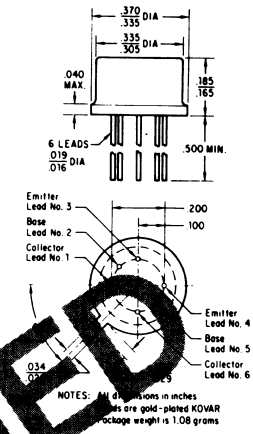


## ABSOLUTE MAXIMUM RATINGS (Note 1)
@ 25°C (unless otherwise noted)

Maximum Temperatures

| | |
|---|---|
| Storage Temperature | -65°C to +200°C |
| Operating Junction Temperature | +200°C |
| Lead Temperature (soldering, 10 second time limit) | +260°C |

| Maximum Power Dissipation | ONE SIDE | BOTH SIDES |
|---|---|---|
| Device Dissipation @ Free Air | 400 mW | 750 mW |
| Linear Derating Factor | 2.3 mW/°C | 4.3 mW/°C |

Maximum Voltage and Current for Each Transistor

| | | |
|---|---|---|
| $V_{CBO}$ | Collector to Base Voltage | 2V |
| $V_{CEO}$ | Collector to Emitter Voltage | 2V |
| $V_{EBO}$ | Emitter to Base Voltage (Note 2) | 7V |
| $V_{CCO}$ | Collector to Collector Voltage | 100V |
| $I_C$ | Collector Current | 10mA |



## ELECTRICAL CHARACTERISTICS @ 25°C (unless otherwise noted)

| SYMBOL | CHARACTERISTICS | MIN | TYP | MAX | UNITS | CONDITIONS |
|---|---|---|---|---|---|---|
| $h_{FE}$ | DC Current Gain | [illegible] | | | | $I_C = 1\mu A$, $V_{CE} = 1V$ |
| $h_{FE}$ | DC Current Gain | 1500 | | | | $I_C = 10\mu A$, $V_{CE} = 1V$ |
| $h_{FE}$ (-55°C) | DC Current Gain | 600 | | | | $I_C = 10\mu A$, $V_{CE} = 1V$ |
| $V_{BE}$ (ON) | Emitter-Base "ON" Voltage | | 0.7 | | V | $I_C = 10\mu A$, $V_{CE} = 1V$ |
| $V_{CE}$ (SAT) | Collector Saturation Voltage | | 0.5 | | V | $I_C = 1mA$, $I_B = 0.1mA$ |
| $I_{CBO}$ | Collector Cutoff Current | | 100 | | pA | $I_E = 0$, $V_{CB} = 1V$ |
| $I_{CBO}$ (+150°C) | Collector Cutoff Current | | 100 | | nA | $I_E = 0$, $V_{CB} = 1V$ |
| $I_{EBO}$ | Emitter Cutoff Current | | 100 | | pA | $I_C = 0$, $V_{EB} = 5V$ |
| $C_{OBO}$ | Output Capacitance | | 0.8 | | pF | $I_E = 0$, $V_{CB} = 1V$ |
| $C_{TE}$ | Emitter Transition Capacitance | | 1.0 | | pF | $I_C = 0$, $V_{EB} = 0.5V$ |
| $C_{C_1C_2}$ | Collector to Collector Capacitance | | 0.8 | | pF | $V_{CC} = 0$ |
| $I_{C_1C_2}$ | Collector to Collector Leakage Current | | 5 | | pA | $V_{CC} = \pm 100V$ |
| $f_T$ | Current Gain Bandwidth Product | 10 | | | MHz | $I_C = 10\mu A$, $V_{CE} = 1V$ |
| $f_T$ | Current Gain Bandwidth Product | 100 | | | MHz | $I_C = 200\mu A$, $V_{CE} = 1V$ |
| NF | Narrow Band Noise Figure | | 3 | | dB | $I_C = 10\mu A$, $V_{CE} = 3V$, f = 1 KHz, $R_G = 10$ Kohms, BW = 200 Hz |
| $BV_{CBO}$ | Collector-Base Breakdown Voltage | 2 | | | V | $I_C = 10\mu A$, $I_E = 0$ |
| $BV_{EBO}$ | Emitter-Base Breakdown Voltage | 7 | | | V | $I_E = 10\mu A$, $I_C = 0$ |
| $V_{CEO}$ (SUST) | Collector-Emitter Sustaining Voltage | 2 | | | V | $I_C = 1mA$, $I_B = 0$ |

## MATCHING CHARACTERISTICS @ 25°C (unless otherwise noted)

| SYMBOL | CHARACTERISTICS | TYP | MAX | UNITS | CONDITIONS |
|---|---|---|---|---|---|
| $\|V_{BE_1} - V_{BE_2}\|$ | Base Emitter Voltage Differential | 2 | 5 | mV | $I_C = 10\mu A$, $V_{CE} = 1V$ |
| $\|(V_{BE_1} - V_{BE_2})\|/°C$ | Base Emitter Voltage Differential Change with Temperature | 5 | 15 | μV/°C | $I_C = 10\mu A$, $V_{CE} = 1V$, T = -55°C to +125°C |
| $\|I_{B_1} - I_{B_2}\|$ | Base Current Differential | | .6 | nA | $T_C = 10\mu A$, $V_{CE} = 1V$ |

NOTES:
1. These ratings are limiting values above which the serviceability of any semiconductor device may be impaired.
2. The reverse base-to-emitter voltage must never exceed 7.0 volts and the reverse base-to-emitter current must never exceed 10 μAmps.

## FEATURES

- High Gain at Low Current – $h_{FE} \geqslant 230$ at 10 mA –5V
- Low Output Capacitance – $C_{obo} \leqslant 3$ pF
- Tight $I_B$ Match – $I_{B1\text{-}2} < .25\ \mu A$ at 1 mA –5V
- Tight $V_{BE}$ Tracking – $\Delta(V_{BE_1} - V_{BE_2}) \leqslant 3\ \mu V/^\circ C$ –55°C to +125°C
- Dielectrically isolated matched pairs for differential amplifiers.

**DUAL MONOLITHIC NPN SILICON PLANAR TRANSISTORS**

# IT126 IT127 IT128 IT129

## GENERAL DESCRIPTION

Dual monolithic NPN Silicon planar transistors used for differential amplifier applications.

## ORDERING INFORMATION

| TO78 | TO71 | WAFER | CHIP |
|---|---|---|---|
| IT126 | IT126-TO71 | IT126/W | IT126/D |
| IT127 | IT127-TO71 | IT127/W | IT127/D |
| IT128 | IT128-TO71 | IT128/W | IT128/D |
| IT129 | IT129-TO71 | IT128/W | IT128/D |

## ABSOLUTE MAXIMUM RATINGS (Note 1)

@ 25°C (unless otherwise noted)

Maximum Temperatures

Storage Temperature –65°C to +200°C

Operating Junction Temperature +200°C

| | TO71 | | TO78 | |
|---|---|---|---|---|
| Maximum Power Dissipation | ONE SIDE | BOTH SIDES | ONE SIDE | BOTH SIDES |
| Total Dissipation at 25°C Case Temperature | 0.3 Watt | 0.5 Watt | 0.4 Watt | 0.75 Watt |
| Derating Factor | 1.7 mW/°C | 2.9 mW/°C | 2.3 mW/°C | 4.3 mW/°C |

Maximum Voltage and Current for Each Transistor

| | | | | |
|---|---|---|---|---|
| $V_{CBO}$ | Collector to Base Voltage | 60V | 55V | 45V |
| $V_{CEO}$ | Collector to Emitter Voltage | 60V | 55V | 45V |
| $V_{EBO}$ | Emitter to Base Voltage (Note 2) | 7V | 7V | 7V |
| $V_{CCO}$ | Collector to Collector Voltage | 70V | 70V | 70V |
| $I_C$ | Collector Current | 100 mA | 100 mA | 100 mA |

## PACKAGE DIMENSIONS

TO-71 TO-78

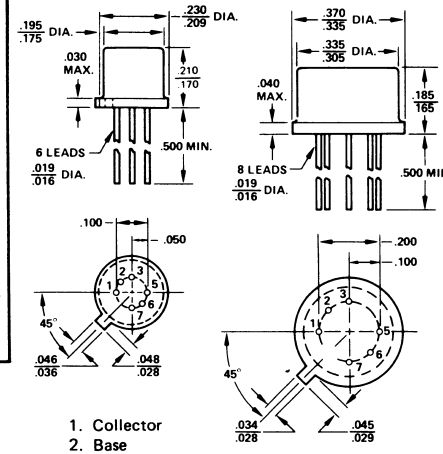


1. Collector
2. Base
3. Emitter
5. Emitter
6. Base
7. Collector

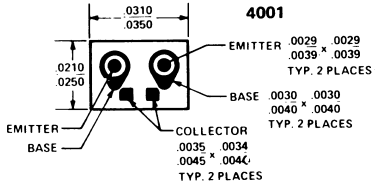


## ELECTRICAL CHARACTERISTICS (@ 25°C unless otherwise noted)

| PARAMETER | | IT126 MIN | IT126 MAX | IT127 MIN | IT127 MAX | IT128 MIN | IT128 MAX | IT129 MIN | IT129 MAX | UNITS | CONDITIONS |
|---|---|---|---|---|---|---|---|---|---|---|---|
| $h_{FE}$ | DC Current Gain | 150 | | 150 | | 100 | | 70 | | | $I_C = 10\ \mu A$, $V_{CE} = 5V$ |
| $h_{FE}$ | DC Current Gain | 200 | 800 | 200 | 800 | 150 | 800 | 100 | | | $I_C = 1.0$ mA, $V_{CE} = 5V$ |
| $h_{FE}$ | DC Current Gain | 230 | | 230 | | 170 | | 115 | | | $I_C = 10$ mA, $V_{CE} = 5V$ |
| $h_{FE}$ | DC Current Gain | 100 | | 100 | | 75 | | 50 | | | $I_C = 50$ mA, $V_{CE} = 5V$ |
| $h_{FE}(-55^\circ C)$ | DC Current Gain | 75 | | 75 | | 60 | | 40 | | | $I_C = 1$ mA, $V_{CE} = 5V$ |
| $V_{BE(on)}$ | Emitter-Base On Voltage | | .9 | | .9 | | .9 | | .9 | V | $I_C = 10$ mA, $V_{CE} = 5V$ |
| | | | 1.0 | | 1.0 | | 1.0 | | 1.0 | V | $I_C = 50$ mA, $V_{CE} = 5V$ |
| $V_{CE(sat)}$ | Collector Saturation Voltage | | .3 | | .3 | | .3 | | .3 | V | $I_C = 10$ mA, $I_B = 1$ mA |
| | | | .6 | | .6 | | .6 | | .6 | V | $I_C = 50$ mA, $I_B = 5$ mA |
| $I_{CBO}$ | Collector Cutoff Current | | 0.1 | | 0.1 | | 0.1 | | 0.1* | nA | $I_E = 0$, $V_{CB} = 45V$, 30V* |
| $I_{CBO}(+150^\circ C)$ | Collector Cutoff Current | | 0.1 | | 0.1 | | 0.1 | | 0.1* | μA | $I_E = 0$, $V_{CB} = 45V$, 30V* |
| $I_{EBO}$ | Emitter Cutoff Current | | 0.1 | | 0.1 | | 0.1 | | 0.1 | nA | $I_C = 0$, $V_{EB} = 5V$ |
| $C_{obo}$ | Output Capacitance | | 3 | | 3 | | 3 | | 3 | pF | $I_E = 0$, $V_{CB} = 20V$ |

## ELECTRICAL CHARACTERISTICS @ 25°C (unless otherwise noted)

| PARAMETER | | IT126 | | IT127 | | IT128 | | IT129 | | UNITS | CONDITIONS |
|---|---|---|---|---|---|---|---|---|---|---|---|
| | | MIN | MAX | MIN | MAX | MIN | MAX | MIN | MAX | | |
| $BV_{C_1C_2}$ | Collector to Collector Breakdown Voltage | 100 | | 100 | | 100 | | 100 | | V | $I_C = \pm 1\ \mu A$ |
| $V_{CEO(sust)}$ | Collector to Emitter Sustaining Voltage | 60 | | 60 | | 55 | | 45 | | V | $I_C = 1$ mA, $I_B = 0$ |
| $BV_{CBO}$ | Collector Base Breakdown Voltage | 60 | | 60 | | 55 | | 45 | | V | $I_C = 10\ \mu A$, $I_E = 0$ |
| $BV_{EBO}$ | Emitter Base Breakdown Voltage | 7 | | 7 | | 7 | | 7 | | V | $I_E = 10\ \mu A$, $I_C = 0$ |

## MATCHING CHARACTERISTICS @ 25°C (unless otherwise noted)

| PARAMETER | | IT126 | | IT127 | | IT128 | | IT129 | | UNITS | CONDITIONS |
|---|---|---|---|---|---|---|---|---|---|---|---|
| | | MIN | MAX | MIN | MAX | MIN | MAX | MIN | MAX | | |
| $\lvert V_{BE_1} - V_{BE_2} \rvert$ | Base Emitter Voltage Differential | | 1 | | 2 | | 3 | | 5 | mV | $I_C = 1$ ma , $V_{CE} = 5V$ |
| $\lvert \Delta(V_{BE_1} - V_{BE_2}) \rvert / °C$ | Base-Emitter Voltage Differential Change with Temperature | | 3 | | 5 | | 10 | | 20 | $\mu V/°C$ | $I_C = 1$ mA, $V_{CE} = 5V$ $T_A = -55°C$ to $+125°C$ |
| $\lvert I_{B_1} - I_{B_2} \rvert$ | Base Current Differential | | 2.5 | | 5 | | 10 | | 20 | nA | $I_C = 10\ \mu A$, $V_{CE} = 5V$ |
| | | | .25 | | .5 | | 1.0 | | 2.0 | $\mu A$ | $I_C = 1$ mA, $V_{CE} = 5V$ |